4 OSC
8/31/79

Lh. 3081

TREE-1370

Distribution Category:

UC-66g

RAFT RIVER GEOTHERMAL AQUACULTURE EXPERIMENT — PHASE II

Donald K. Campbell Fred L. Rose

James C. Kent Lynn R. Watson

Jacquelyn F. Sullivan

MASTER

AUGUST 1979

EG&G Idaho, Inc.

IDAHO NATIONAL ENGINEERING LABORATORY

DEPARTMENT OF ENERGY

IDAHO OPERATIONS OFFICE UNDER CONTRACT DE-AC07-76IDO1570

DISCLAIMER

Printed in the United States of America
Available from
National Technical Information Service
U.S. Department of Commerce
5285 Port Royal Road
Springfield, Virginia 22161
Price: Printed Copy $4.50; Microfiche $3.00

TREE-1370
Distribution Category:
UC-66g

RAFT RIVER GEOTHERMAL AQUACULTURE EXPERIMENT — PHASE II

Donald K. Campbell
Fred L. Rose
James C. Kent
Lynn R. Watson
Jacquelyn F. Sullivan

EG&G Idaho, Inc.

Published August 1979

PREPARED FOR THE
U.S. DEPARTMENT OF ENERGY
IDAHO OPERATIONS OFFICE
UNDER CONTRACT NO. DE-AC07-76IDO1570

ACKNOWLEDGMENTS

Especially valued was the cooperation and professional advice of L. Ray, Fish Breeders of Idaho. The cooperation of T. Fujimura and C. Hanson of the Anuenue Fisheries Center was greatly appreciated. Data collection and system maintenance services supplied by G. Cooper, K. Peterson, and other EG&G Idaho, Inc. personnel were invaluable to the success of this project. Dr. D. Johnson, Murray State University, directed the Phase I study. K. Gassar, J. Ledger, and V. Moore (Idaho State University) participated in the Phase I study while increasing their understanding of the problems and rewards of aquaculture.

ABSTRACT

This report covers Phase II of the Raft River aquaculture experiment conducted by EG&G Idaho, Inc., at the Department of Energy (DOE) Raft River Geothermal Site in south-central Idaho, initiated in 1976. The overall objective of the experimental work was to assess the feasiblity of culturing various species of aquatic organisms directly in geothermal water.

To briefly review Phase I of the experiment, growth of channel catfish (*Ictalurus punctalus*), tilapia (*Tilapia zillii*), and Malaysian prawns (*Macrobrachium rosenbergii*) in moderate-temperature geothermal water was physically evaluated by length and weight analyses and/or biochemical analysis for collagen content.

During Phase II, both growth and physiological parameters were investigated for the three types of organisms. The primary focus of this report is on Phase II work.

Work is now in progress on Phase III which is intended to address programmed growth, diet trials, further study of physiology and metabolism of channel catfish and common carp *(Cyprinus carpio)*, and economic analysis of geothermal aquaculture.

Phase IV, potential follow-up research, is intended to investigate reproduction of fish in geothermal water, physiological parameters of the young, and density evaluations. Thus, the entire study will have assessed the technical and economic feasibility of geothermal aquaculture throughout all phases of fish culture.

SUMMARY

The objective of the Raft River aquaculture experiment was to assess the feasiblity of culturing channel catfish (*Ictalurus punctalus*), Tilapia (*Tilapia zillii*)[a], and Malaysian prawns (Macrobrachium rosenbergii) directly in geothermal water.

Phases I and II of the research have been completed. Phase III is currently underway and scheduled for completion in September of 1979. Phase IV, which has not been initiated yet, is intended to study reproduction in geothermal water, physiological parameters of the young, and culture density evaluations.

PHASE I

In June 1976, the Energy Research and Development Administration (ERDA) entered into a contract with Idaho State University (ISU) to investigate the commercial potential for geothermal aquaculture. EG&G Idaho, Inc., established the aquaculture research, managed the contract with ISU, and operated the experimental facility. Preliminary experimental work[1] was conducted at the Raft River Geothermal Testing Site (RRGT), located in Cassia county in south-central Idaho, operated by EG&G Idaho, Inc., prime contractor for the Idaho National Engineering Laboratory (INEL). The overall objective of the study was to evaluate the commercial feasibility of culturing aquatic species in geothermal water. Specific objectives were to examine: (a) the acute toxicity of Raft River geothermal water to channel catfish, tilapia species, and the Malaysian prawn; and (b) the growth rates of the experimental species. The experiment was established and operated from August 2, 1976 to December 3, 1976, as a preliminary study to determine if aquatic species could survive in geothermal water prior to significant investment in an experimental aquaculture facility.

Phase I addressed the growth and survivial in the short-term toxicity of geothermal water for the two fish species and the one invertebrate specie.

Fish growth equalled or exceeded that attained at a commerically successful culture operation utilized in a companion control study (Fish Breeders of Idaho, Inc., Buhl, Idaho). Prawn growth also was not inhibited in the geothermal water. Fish and prawn mortality during the study was negligible and presumably not related to geothermal water chemistry. The results of the preliminary experiment were encouraging for continuation studies in geothermal aquaculture, and preparation commenced for a second phase follow-on study.

PHASE II

Channel catfish, tilapia and Malaysian prawns were cultured directly in geothermal water for approximately seven months at the Department of Energy, Raft River Geothermal Site, to evaluate the organisms throughout a grow-out cycle. Parameters evaluated included survival, growth, bioaccumulation of metals and fluoride, collagen synthesis, and bone calcium levels. Growth at Raft River was slightly lower than at a companion commercial facility at Buhl, Idaho, but was attributed to facility differences rather than an adverse impact of geothermal water. No significant differences were recorded between Raft River and Buhl fish for bone calcium or collagen concentrations. No significant accumulation of heavy metals by fish or prawns was recorded.

---

a. A genus of African fresh-water food fish (family Cichlidae).

CONTENTS

FIGURES

TABLES

RAFT RIVER GEOTHERMAL AQUACULTURE EXPERIMENT — PHASE II

I. INTRODUCTION

Aquaculture is the controlled husbandry of aquatic organisms, including both marine and freshwater animals and plants. Although aquaculture has not been a major industry for protein production in the United States[2] there has recently been increased interest in aquatic farming. One of the most dramatic examples is the U.S. catfish industry in which 145 152 kg were produced in 1960; however, by 1976 this had increased to about 31 752 000 kg (see Reference 3). Farm raised catfish supply three major markets: processing plants, live haul/pay lakes, and local farm sales; with the latter consuming the largest percentage[3]. During 1978, U.S. human consumption of farm raised catfish totaled 13 688 000 kg, with approximately half (5 515 000 kg) coming from imports[4]. It has been estimated that the demand for catfish in the near future could increase by as much as 15 times. Over the past few years, there has also been an increasing interest in the utlization of low-grade waste heat in the production of aquatic organisms[5]. Several factors have contributed to this increased interest: (a) the 1972 energy crisis which focused attention on the necessity of efficiently utilizing resources, (b) the implementation of Federal Water Pollution Control Administration regulations prohibiting pollution of waterways, and (c) a general increase in awareness and knowledge of the benefits of waste heat utilization.

The Phase II aquaculture study was initiated at the Raft River Geothermal Site during late 1977 as part of the direct applications program. The aquaculture project was expanded to determine if low- or moderate-temperature geothermal water could be utilized to culture aquatic species to produce a beneficial, high quality protein product suitable for human consumption. There are presently two commercial fish farms utilizing geothermal water mixed with fresh water in Idaho[6]. In both cases, the organisms cultured are channel catfish and tilapia. The goals of Phase II of the aquaculture project were to:

(1) Determine whether channel catfish (*Ictalurus punctalus*), tilapia (*Tilapia zillii*), and Malaysian prawn (*Macrobrachium rosenbergii*) could grow at a commercially acceptable rate

(2) Determine if the culture organisms could be raised to a marketable size in an acceptable time period

(3) Investigate the potential for accumulation of toxic materials from geothermal water during a grow-out period

(4) Determine if factor(s) inherent in the geothermal water source interfered with selected physiological parameters

(5) Determine if density influenced growth in the experimental populations.

These goals were all directed at satisfying the overall objective of determining the economic feasibility of utilizing low-temperature geothermal reservoirs for commercial aquaculture developments.

The Phase I study indicated that channel catfish and tilapia could be grown in geothermal water at a rate comparable to that in a commercial facility. However, results from the study indicated that bioconcentration of mercury in both species was a potential problem. These factors were examined throughout a 7-month grow-out period during which fish were raised from fingerling stage to market size.

II. MATERIALS AND METHODS

1. EXPERIMENTAL FACILITY

During the fall of 1977, an experimental aquaculture facility was constructed by EG&G Idaho, Inc., at the Raft River Geothermal Site. The facilty consisted of two cooling ponds, ten indoor raceways, four outdoor raceways, and two outdoor culture ponds (see Figure 1). The system was designed to utilize once-through gravity flow from the cooling ponds through the indoor raceways to the outdoor raceways, and then to the culture ponds from which water was discharged to a reserve pit. The water flowed directly from a geothermal well (depth approximately 1525 m, at a temperature of 146°C) to a flash tank where the super- heated water was converted to water and steam upon reduction in pressure. The liquid phase collected in the tank and flowed into the first of two cooling ponds at approximately 97°C. The cooling ponds were equipped with electric pumps and sprayers to recirculate and cool the water to approximately 25°C. Temperature control of the water was achieved by installation of a geothermal make-up line, temperature regulating valves, and a mixing chamber designed to regulate the water temperature.

Water temperatures were maintained at 27 $\pm$2°C which has been described as the optimum range for channel catfish[7,8,9]. An optimum temperature for the growth of Malaysian prawns is 28°C[10].

Maximum water flow capacity through the system was 500 l/min with a nominal requirement of 250 l/min. Flow rates through all indoor fish raceways were optimally maintained at 18.9 l/m (13-min turnover), except during a period of two weeks when flows was reduced to 7.6 l/min for repairs. Outdoor raceways and ponds received the combined effluent from the indoor raceways (13 min and 5.32 hr turnover, respectively). Water storage capacity in the cooling ponds was estimated to be 48 hr, providing a reserve supply if the well flow was interrupted. In addition, air stones connected to a compressor were placed in each raceway to provide supplementary oxygen if water flow was reduced or interrupted. Carbon steel pipe was used to transport all water at a temperature greater than 93.3°C, while polyvinyl chloride (PVC) pipe and fittings were used within the experimental facility itself. A 10-day flush period at 30°C was used to leach toxic plasticizers from PVC pipe[11]. Epoxy-coated plywood raceways were of three sizes. Indoor raceways were 60.9 × 243.8 × 40.6 cm with a water volume of 0.24 m^3 and were used for both fish species and prawn. Prawn were also placed in 30.5 × 243.8 × 40.6 cm indoor raceways with a water volume of 0.12 m^3. Outdoor raceways measured 60.9 × 243.8 × 121.9 cm with a water volume of 1.27 m^3 and were used for rearing fish only. The vinyl-lined culture ponds were 5.49 × 5.49 × 1.22 m with a volume of 36.29 m^3. Screened standpipes were employed to maintain water levels in all raceways and ponds.

Growth in the experimental raceways was compared to a commercial fish farm owned and operated by Leo Ray in Buhl, Idaho. Concrete raceways at the commercial farm measured 3.05 × 6.10 × 1.22 m with water volume of 24.92 m^3. Rigid temperature controls were not always possible due to the requirements of commercial fish production (e.g., lowering temperatures for grading and handling fish). However, temperatures averaged 28°C $\pm$1 for the experimental period, and flow rate was 5073 l/min (5-min turnover).

2. FISH

2.1 Growth

Channel catfish averaging 20.7 g were stocked in Raft River raceways at 2.88 and 5.77 kg/m^3 on January 4, 1978. At the Buhl control facility, fish densities at the time of initial stocking were 2.88 kg/m^3. The control populations in Buhl were moved during the twelfth week of the experimental grow-out period to a different raceway on March 29, 1978, for water delivery and maintenance reasons. Catfish were initially fed Rangen's high quality trout feed having a protein content of 35% until Rangen's pelleted sinking catfish ration became available on March 11, 1978. This feed was used for the remainder of the experimental period at both facilities. Terramycin supplemented feed was used from February 24 to March 11

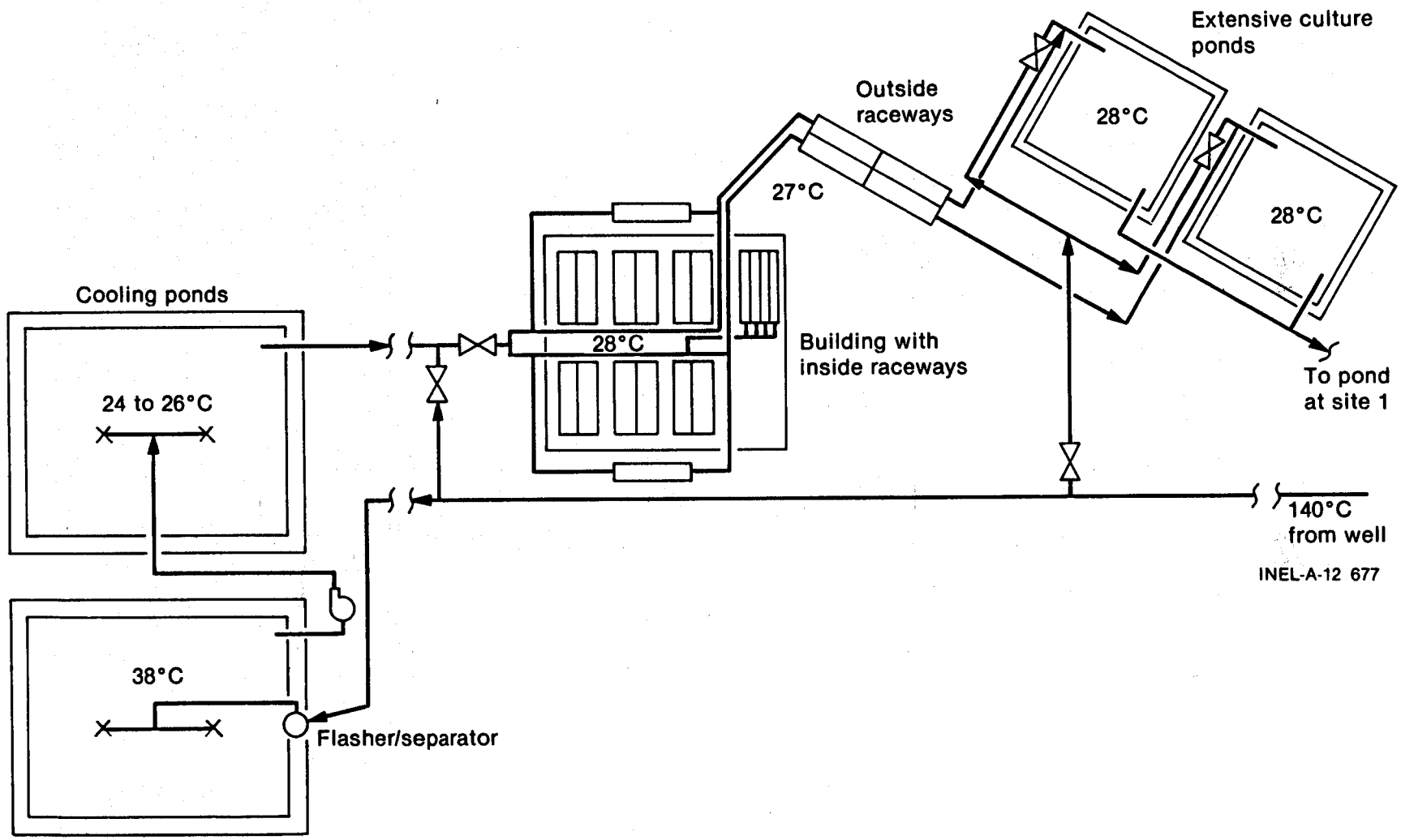

Fig. 1 Aquaculture experiment layout.

when a bacterial infection was suspected but not confirmed. Demand feeders were employed on all raceways until March 17, when manual feedings were substituted. Fish were fed on a percent-by-weight basis twice daily.

Tilapia having an average weight of 7.53 g, were stocked in both the control and the experimental raceways on January 20, 1978. Fish densities for this species were: Raft River 1.92 and 3.84 kg/m^3; Buhl 1.92 kg/m^3. Tilapia in the indoor raceways were fed Rangen's high quality trout ration at a rate of 6% of body weight portioned into two daily feedings. Tilapia reared outdoors received only the food in the effluent from the combined indoor and two upper outdoor raceways, and thus were not fed directly. Feed ratios for all fish were adjusted on a weight basis every 2 weeks, with the quantities to be fed determined from the measurements taken on preceding sampling dates or by calculation. As fish were measured monthly, feeding regimens were based on the feed conversion ratios (amount of feed/increase in fish weight) obtained during the previous month or on an arbitary (feed:fish) ratio, whichever was lower.

Fish were sampled for growth (standard length in millimeters and weight in grams), bone development, and heavy metal and fluoride accumulation on a monthly basis (except in April when only growth measurements were taken to avoid depleting all fish in the low-density raceways for sampling purposes). Fish were killed by severing the caudal peduncle and were then placed on ice and transported back to the Idaho State University laboratory where they were stored at -40°C until further analyses could be completed. Fish measured for growth were marked by adipose finclip (catfish) or pectoral finclip (Tilapia) and replaced in the raceways to maintain constant densities. Analysis of variance using the Student-Newman-Keuls test was utilized in analysis of growth data.

Bone collagen makes up 90% of the organic matric of bone[12]. Any suppression of collagen synthesis, therefore, would seriously impact fish growth. This parameter was monitored as a backup to simple growth measurements. Bone collagen was determined on the posterior section of the vertebral column by established methods[12,13]. Bone phosphorus was analyzed by the method of Fiske and Subbarrow, as later modified[14]. Fluoride concentrations were determined according to methods established in Reference 15.

Analysis for bone calcium was based on the methods for preparation of bone for phosphorus analysis. The acidified sample was diluted in potassium chloride solution to give a final calcium concentration of 0 to 10 μg/ml and was then analyzed by atomic absorption spectrophotometry using a Varian Techtron Model 1200 AA unit with a nitrous oxide/acetylene flame.

3. PRAWN

On January 24, 1978, 30-day post-larvae juvenile prawns obtained from the Weyerhauser commercial prawn operation in Homestead, Florida were stocked in indoor raceways at Raft River. The shrimp had a mean length of 16.1 mm (range 11.7 to 26.9 mm) measured from the tip of the rostrum to the tip of the telson. Stocking densities and number of prawns per raceway are listed in Table I.

All raceways and cages stocked with prawn were supplied with poly vinyl ballast rings (Glitsch Company, Dallas, Texas) which were added to provide escape cover for the young prawns. Prior experimentation conducted on the Idaho State University campus indicated that the presence of escape cover had a greater effect than stocking density on decreasing cannibalism. The animals were fed a commercially prepared shrimp chow (Ralston-Purina Company). Water flow rates in small raceways (13, 14, 15, and 16) were 5 l/min while a flow rate of 8 l/min was maintained in the two larger raceways (7 and 8). Counts and measurements of the prawns were made periodically to determine growth and survival.

Mortality encountered early in the experiment required the restocking of several raceways with 25-day post-larvae prawns obtained 2 months into the experiment from the Anuenue Fisheries Laboratory in Honolulu, Hawaii. In an attempt to reduce mortality during shipment, the incoming aircraft was met at

Portland, Oregon, and water was immediately changed and aerated for shipment to the Raft River Site. Prawns surviving from the initial stocking in raceways 14, 15, and 16 were transferred to raceway 13 bringing the total number of prawns in that raceway to 41. Similarly, in the larger raceways, 107 surviving prawns from raceway 7 were transferred to raceway 8 bringing the total number to approximately 230. New stocking rates are listed in Table II.

A third effort was made to successfully culture prawns at Raft River, when 75-day post-larvae prawns were obtained 3 months into the experiment from the Oregon Institute of Technology at Klamath Falls, Oregon. Malaysian prawns have been reared there for the past two years[16]. A total of 143 prawns with a mean length of 24.7 mm (range 19.4 to 29.2 mm) were stocked in raceway 7 to reestablish the number of prawns and density to the original prescribed levels (160 and 107/m^2, respectively). Also, 350 prawns were added to Pond 1 9 days later.

TABLE I

INITIAL STOCKING DENSITIES FOR MACROBRACHIUM

Raceway	Number of Prawns	Density (prawns/m^2)
7	160	107
8	320	214
13	40	52
14	80	107
15	160	214
16	320	428
Pond 1 (cage)	80	80
Pond 2 (cage)	100	100

TABLE II

ADJUSTED STOCKING DENSITIES FOR MACROBRACHIUM

Raceway	Number of Prawns	Density (prawns/m^2)
7	160	107
14	160	214
15	100	135
16	none	--
Pond 2	500	14

4. WATER QUALITY

4.1 Dissolved Oxygen

Dissolved oxygen determinations were made using the Winkler method[17]. Temperature was recorded, and percent saturation was calculated for the local elevation. Weekly measurements from at least two different raceways at Raft River were taken to monitor oxygen levels. Initial results indicated that there was little variability from week to week; the sampling regime was, therefore, reduced to spot checks.

4.2 Nitrite-Nitrogen

Weekly water samples were analyzed not more than 2 hr after sample collection using the method described by the U.S. Environmental Protection Agency[18].

4.3 Hardness

Total carbonate hardness was measured not more than 2 hr after sample collection using the methods cited in References 17 and 19.

5. ELEMENTAL ANALYSIS

5.1 Mercury

Using the flameless vapor-generation technique[20] for greater sensitivity, water and tissue residues were analyzed for mercury by atomic absorption spectrophotometry (AAS) with a Varian Techtron Model 1200 instrument. At least 1 g of epaxial tissue per fish was analyzed after being wet-digested . Geothermal water was analyzed directly.

5.2 Cadmium

Water and tissue residues were analyzed by AAS using a carbon-rod attachment[21]. Water samples were analyzed directly. One gram tissue samples were wet-digested prior to analysis.

5.3 Copper and Zinc

Water and tissue residues were analyzed by AAS using an air-acetylene flame[22] on samples prepared in the same manner as for cadmium analysis.

5.4 Fluoride

Fluoride concentrations in catfish were determined using the technique described in Reference 23 with slight modifications. Catfish samples were selected from three sampling periods representing the beginning, middle, and end of the experimental period. Five fish from each sample period were analyzed. Samples of muscle tissue were dried at 100°C for 24 hr, ground to a fine powder, weighed, and extracted with 10 ml of 0.5 N H_2SO_4. To determine fluoride content, samples were neutralized adding 1.0 ml of 2 N NaOH. To give a final sample pH of 4.5, 11 ml of total ionic strength activity buffer (TISAB) were added. Fluoride concentrations were determined using an Orion fluoride specific ion electrode[24].

III. RESULTS

1. FISH

1.1 Growth

A summary of growth food conversion data appears in Table III and Figures 2 and 3. Catfish with an initial mean weight of 27 g were stocked at Raft River and Buhl on January 4, 1978. During the 27-week grow-out period, the fish at Buhl reached a mean weight of 407 g. At Raft River, in the high-density indoor raceways (2 and 9) catfish achieved a mean weight of 246 g while those in the outdoor raceway (19) attained a mean of 347 g. Catfish grown in low-density indoor raceways (4 and 11) reached a final mean weight of 181 g and 332 g outdoors (18).

Tilapia growth was influenced by problems encountered during the experiment which are addressed in the discussion section. Tilapia were stocked at both facilities on January 20, 1978, and had an initial mean weight of 7.5 g. In the high-density indoor raceways (5 and 12) tilapia reached a mean size of 41 g, and in the high-density outdoor raceway (21) they average 78.7 g by the end of the experiment. Tilapia in low-density indoor raceways (3 and 10) had a mean weight of 55 g, and those in the outdoor raceway (20) averaged 81.3 g.

1.2 Food Conversion

Food conversion efficiency data are summarized in Table III. Rates of feed conversion (the conversion of food into fish biomass) for catfish generally declined during the course of the experiment, indicating more efficient utilization of the food with age. Conversion rates for the high-density indoor raceways (2 and 9) were 5.9 initially and 5.3 during the last portion of the experiment indicating more efficient utilization of the food with age. In raceway 19 (high-density, outdoor) food conversion increased slightly from an initial value of 3.71 to a final value of 4.6. However, in the middle portion of the experiment food conversion in that raceway was 1.57. In the low-density indoor raceways (4 and 11) food conversion decreased from 9.1 to 5.2 during the experiment. In the low-density outdoor raceway (18) the initial food conversion was 6.02 and 4.0 at termination; the intermediate value was 1.27. Food conversion rates at Buhl were nearly constant throughout the grow-out period and averaged approximately 2.7.

Tilapia food conversion data are available only for indoor raceways, since those held in outdoor raceways received the effluent from the indoor fish raceway but were not fed directly. Low-density feed conversions in raceways 3 and 10 were 1.5, initially, and increased throughout the experimntal period (16.7 on March 17; 31.5 on July 11, 1978). Conversions in high-density raceways (5 and 12) followed a similar pattern, increasing from 1.3 to 39.2.

1.3 Survival and Mortality

Survival and mortality data are expressed in Table IV. A mortality rate of 0.03% per day can be expected[25]. Mortality rates of fish held indoors are at or below this level. Although mortality rates outdoors were considerably higher, records kept by field operations personnel account for less than one third of the apparent mortality based on total fish counts made at the outset and termination of the experiment. Survival and mortality in Buhl catfish were approximately equal to that at Raft River. However, there was some error possible in the estimation of the total number of fish originally stocked (2200) at Buhl.

Survival and mortality data for tilapia cannot be addressed due to problems outlined in the discussion.

1.4 Bone Calcium

Results of the calcium levels in vertebral bone from fish (Table V) revealed no consistent differences between fish species or the location in which they were grown. Any small temporal variability is nullified by similar variability in quality control over the analysis period of several days.

TABLE III

SUMMARY OF WEIGHT GAIN AND FOOD CONVERSION RATIOS
FOR CATFISH AND TILAPIA DURING GROW-OUT PERIOD
(January 24, 1978 to July 11, 1978)

Raceway	Initial Mean Weight (g)	Final Mean Weight (g)	Food Conversion Ratio			Initial Density (kg/m^3)	Final Density (kg/m^3)
			Outset	Midway	Final		
Catfish							
2, 9 Indoor	27	246	5.9	5.31	3.3	5.77 (HD)[a]	102.85
19 Outdoor	27	347	3.7	1.57	4.6	5.77	80.88
4, 11 Indoor	27	181	9.1	3.31	5.2	2.88 (LD)[b]	42.21
18 Outdoor	27	332	6.02	1.27	4.0	2.88	41.09
Buhl	27	407	3.49	3.62	2.48	2.88	53.02
Tilapia							
5, 12 Indoor	7.5	41	1.3	8.5	39.2[c]	3.84 (HD)	38.44
21 Outdoor	7.5	78.7	--	--	--	3.84	14.44
3, 10 Indoor	7.5	55	1.5	16.7	31.5[d]	1.92 (LD)	24.37
20 Outdoor	7.5	81.3	--	--	--	1.92	23.88

a. High density.

b. Low density.

c. Raceway 5 only — see discussion.

d. Raceway 3 only — see discussion.

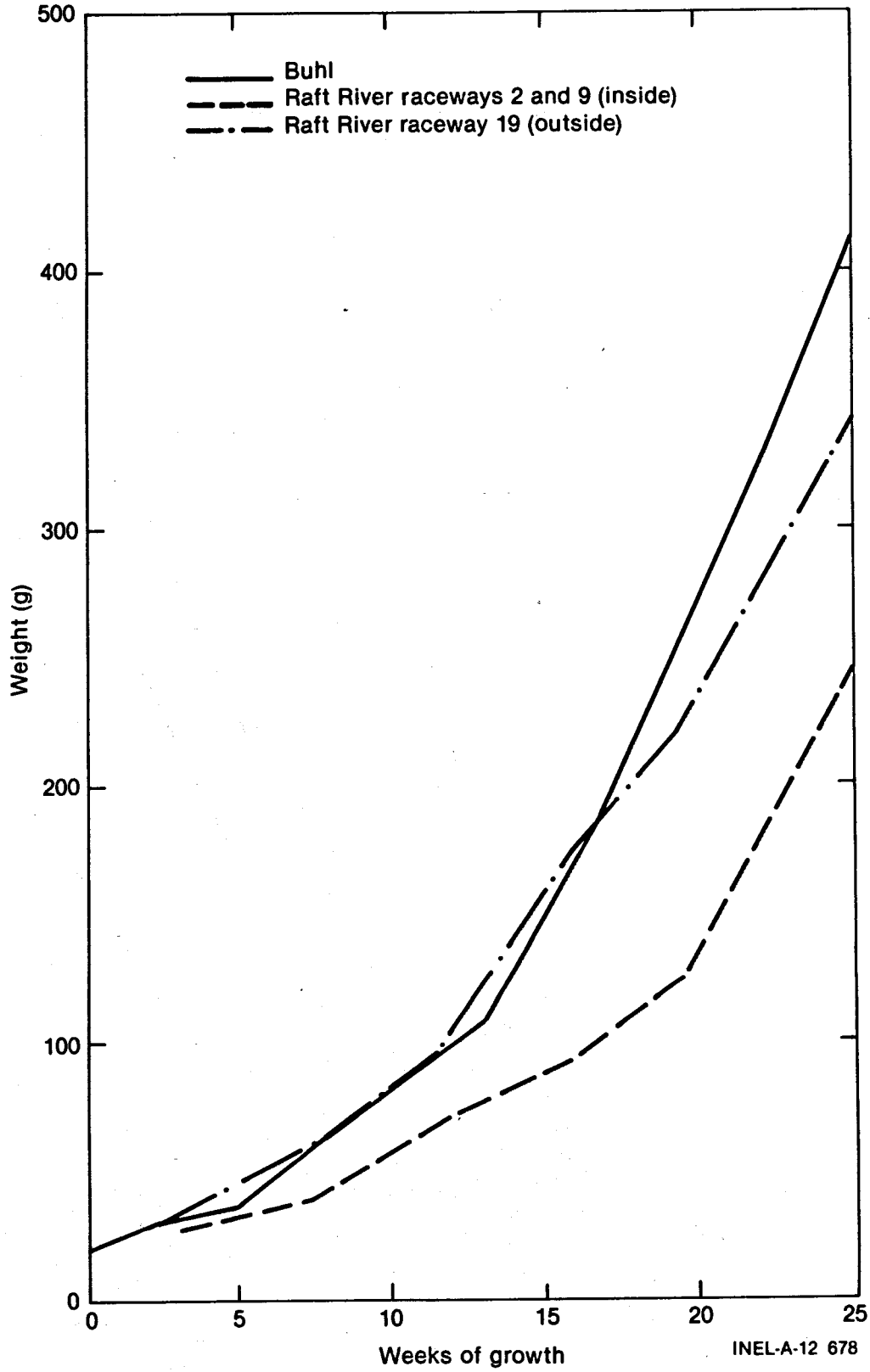

Fig. 2 Channel catfish growth in high-density raceways.

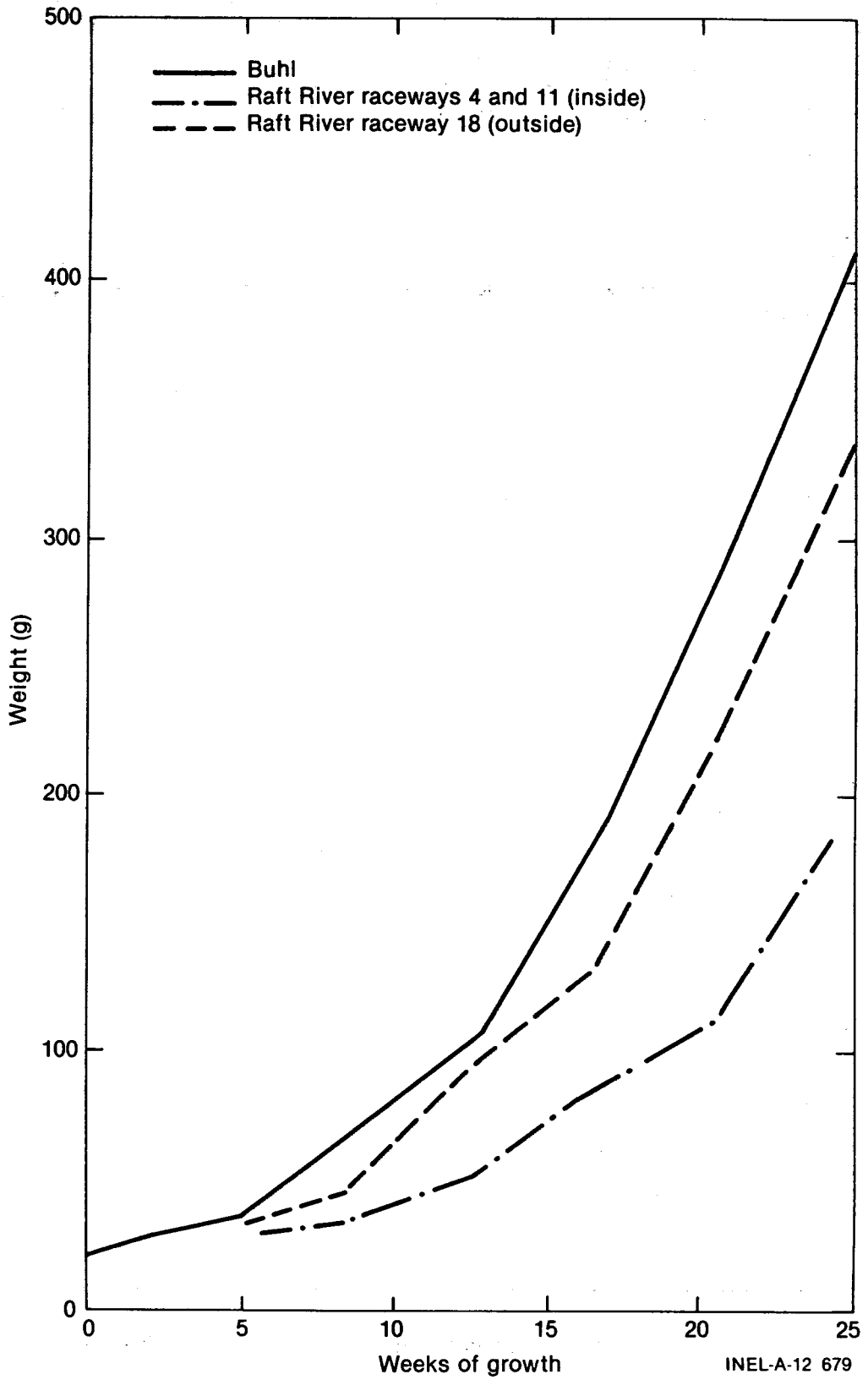

Fig. 3 Channel catfish growth in low-density raceways.

TABLE IV

SURVIVAL AND MORTALITY OF CHANNEL CATFISH

	Survival (%)	Mortality/Day (%)
Indoor - Low Density	94.0	0.03
Indoor - High Density	97.1	0.02
Outdoor - Low Density	88.2	0.06
Outdoor - High Density	83.1	0.09
Buhl	87.5	0.07

TABLE V

CALCIUM LEVELS IN FISH FROM RAFT RIVER AND BUHL
(μg Ca/g Dry Vertebral Bone, Mean ± Standard Deviation)

Source	Catfish	Tilapia
Buhl	153 ± 14 (4)[a]	--
Buhl	--[b]	189 ± 33 (6)
Raft River	144 ± 49 (12)	--
Buhl	--	168 ± 14 (6)
Buhl	169 ± 55 (5)	154 ± 11 (5)
Raft River	--	158 ± 33 (12)
Raft River	182 ± 20 (12)	--
Buhl	193 ± 16 (6)	191 ± 33 (6)
Raft River	181 ± 18 (12)	216 ± 22 (12)

a. Sample size in parentheses.

b. No samples analyzed.

1.5 Fluoride

Fluoride levels in catfish (Table VI) were initially quite high both in organisms at Raft River and Buhl. However, fluoride residues declined in both fish stocks during the grow-out period. Raft River catfish contained a mean fluoride level of 30.84 ppm on February 2, 1978, and Buhl fish contained a mean of 21.98 ppm on January 4, 1978. At the time the experiment was terminated, fluoride levels had declined to a mean of 3.28 ppm for Raft River catfish and 5.0 ppm for Buhl fish. There was no significant difference ($p = 0.05$) between tissue fluoride levels from fish grown at Buhl and Raft River at the beginning and end of the experiment.

TABLE VI

FLUORIDE LEVELS IN CHANNEL CATFISH FROM RAFT RIVER AND BUHL

Location	Number of Fish Sampled	mg Fluoride/l (Mean)	Standard Deviation)
Buhl	5	21.98	(12.2)
Raft River	5	30.84	(7.6)
Raft River	5	15.20	(10.2)
Buhl	5	2.05	(1.4)
Raft River	5	3.28	(3.3)
Buhl	5	4.02	(4.2)

1.6 Collagen

Collagen concentrations in the vertebral column of channel catfish were not statistically different ($p = 0.05$) in any of the groups during the course of the experiment. The ranges reported are consistent with those noted in Reference 26 for channel catfish.

Vertebral collagen concentrations in tilapia increased at the control site during the first 3 months of the study; however, the final level attained was similar to values reported for fathead minnows and trout[12]. Concentrations determined in fish held in both low and high densities at Raft River were constant over the experimental period. The initial low values obtained at Buhl may be due in part to a dietary deficiency, or possibly simply to life stage.

2. PRAWN GROWTH

Growth and survival of Malaysian prawns at the Raft River facility were disappointing. Of the 30-day post-larvae prawns originally stocked on January 24, 1978, survival in the various raceways 5 weeks later ranged from 7.5 to 79%. Maximum survival occurred in raceway 7 and the cage in Pond 1, where more than 70% of the prawn were still alive on March 3. Growth of the surviving prawns approached 0.22 mm/-day in raceways 7 and 8 for the first 5-week period. However, a much higher growth rate was observed for prawns held in the cage in Pond 1, as they achieved a mean growth rate of 0.77 mm/day during that same period.

After restocking the raceways on March 25, with 25-day post-larvae shrimp, subsequent counts were made to determine survival after one week. The highest survival rate was observed in raceways 7, 8, and 15; all of which contained densities greater than 100 prawns/m^2. Survival was 62, 83, and 64%, respectively. Survival was again poor in raceways 13 and 14 where densities were 53 and 107 prawns/m^2. The third restocking effort on April 21, with 75-day post-larvae prawns in raceways 7 and 13 and in Pond 2 resulted in significantly higher survival rates. Counts made on June 8 revealed survival values from 30 to 87% based on April counts and restocking. It should be noted that there was a marked increase in survival in raceways 13, 14, and 15. Caged prawn survival from Pond 2 was again high (84%). Prawns placed in Pond 1 were not recounted because survival was estimated to be severely reduced due to numerous tilapia eating the prawns.

Final measurements to determine growth rates were made on June 8, 1978. Only prawns from raceways 7 and 8 were measured. Those from the cage in Pond 2 were last measured on May 17, 1978 and then released into the pond at large. Prawns from raceways 7 and 8 showed a mean growth rate of approximately 0.24 mm/day and 0.41 mm/day, respectively. Animals caged in Pond 2 again showed a markedly higher mean growth rate of 0.66 mm/day.

3. WATER QUALITY

Water quality data are summarized in Table VII.

3.1 Dissolved Oxygen

Concentrations of dissolved oxygen ranged from 5.8 to 9.8 ppm with a mean of 7.1 and 6.4 ppm at Raft River and Buhl, respectively.

3.2 Nitrite-Nitrogen

Nitrite levels at Raft River or Buhl did not exceed 7.7 μg/l, above which is believed to be toxic to fish[27].

3.3 Hardness

Buhl water was, on the average, about half as hard as Raft River water. Raft River geothermal water is considered to be "hard" at 128 to 158 mg/l, whereas Buhl water is relatively "soft" at 72 to 96 mg/l[28].

TABLE VII

WATER QUALITY FOR RAFT RIVER AND BUHL GEOTHERMAL WATER
(Values are Reported as Mean with Standard Deviation in Parentheses)

	Dissolved Oxygen (mg/1)	Hardness (mg/1 $CaCO_3$)	Nitrite (µg/1 NO_2-N)	Mercury (µg/1)	Cadmium (µg/1)	Copper (µg/1)	Zinc (µg/1)
Raft River	7.1 (1.44)	150 (11.5)	6.2 (1.1)	ND[a]	ND	ND	ND
Buhl	6.4 (--)	86 (12.5)	7.7 (3.0)	ND	ND	ND	ND

a. All samples were nondetectable except the October 7, 1977 readings of 5.0 (0.0) and the February 10, 1978 readings of 5.7 (1.3). Elements are nondetectable at detection limits of: Hg - 2.5 µg/1; Cd - 2.4 µg/1; Cu - 2.0 µg/1; Zn - 5.0 µg/1.

4. HEAVY METALS

4.1 Mercury

Mercury residues were not detectable (less than 2.4 μg/kg or ppb) in catfish, tilapia, or prawn tissues as was found in Phase I. Mercury was detectable in geothermal water at 5.0 μg/l and 5.7 μg/l on October 7, 1977 and February 10, 1978, respectively, but was less than 2.5 μg/l in all other samples (Table VII).

4.2 Cadmium

Cadmium residues were periodically detectable in fish tissues (Table VIII) but not in prawn tissues. Two catfish contained 152 ± 51 μg/kg on January 4, 1978; nine catfish from Buhl contained 93 ± 43 μg/kg on March 11, 1978; one catfish from Buhl on both May 7 and June 29, 1978 contained 60 μg/kg each. These values do not indicate the presence of accumulation of dangerous levels of cadmium in fish tissues at Raft River or Buhl. A total of 98 other catfish at Raft River and Buhl contained less than 2.6 μg/kg cadmium. Cadmium was not detected in 79 tilapia tissue samples taken over the 6-month grow-out period. Water samples did not contain detectable levels of cadmium.

4.3 Copper

Residues of this metal were not detected (less than 2.0 μg/kg or ppb) in catfish, tilapia, or prawn tissue. Analysis of water samples also failed to show detectable levels of copper.

4.4 Zinc

An initial water sample taken at Buhl on January 4, 1978 yielded a zinc concentration of 12.0 μg/l (12 ppb). Zinc levels in subsequent water samples from Buhl were below the level of detection (5.0 μg/l). Raft River water samples did not contain detectable levels of zinc.

Analyses for zinc residues in fish revealed interesting changes over the experimental period. Buhl catfish continued mean zinc residues ranging from 3.9 to 11.8 mg/kg. The highest mean value was recorded for catfish collected on February 9, 1978, and residues declined thereafter. Mean zinc values for Raft River catfish never exceeded 4.64 mg/kg and did not vary greatly during the experiment. A total of 170 catfish were analyzed for zinc. Tilapia collected at the Buhl site contained mean zinc concentrations ranging from 8.06 to 15.79 mg/kg; those from Raft River contained 10.27 to 14.8 mg/kg. Zinc analyses were carried out on a total of 130 tilapia. Prawn were analyzed for heavy metals on two occasions (June 8 and July 7, 1978), and mean zinc levels were 6.1 and 11.5 mg/kg on the respective dates.

TABLE VIII

HEAVY METAL RESIDUES IN FISH AT RAFT RIVER AND BUHL
(All Values are Expressed as Mean ±95% Confidence Interval; number of samples in parantheses)

Species	Date	Source	Mercury (µg/kg)	Cadmium (µg/kg)	Copper (µg/kg)	Zinc (mg/kg)
Channel Catfish	1-4-78	Buhl	ND[a] (10)	152 ± 51 (10[b], 2[c])	ND (10)	4.89 ± 1.91 (10, 10)
	2-4	RR-1	ND (10)	ND (10)	ND (20)	4.405 ± 2.49 (20, 20)
	2-9	Buhl	ND (8)	—	ND (10)	11.81 ± 5.65 (10, 10)
	3-3	RR-1	—	ND (20)	ND (20)	4.305 ± 1.62 (20, 20)
	3-11	Buhl	ND (8)	93 ± 43 (10, 9)	ND (10)	10.09 ± 2.00 (10, 10)
	3-31	RR-1	ND (8)	ND (6)	ND (20)	3.94 ± 3.39 (20, 20)
	4-7	Buhl	ND (8)	ND (6)	ND (10)	6.33 ± 1.58 (10, 10)
	5-7	Buhl	ND (8)	60 (10, 1)	ND (10)	6.30 ± 4.78 (10, 10)
	5-24	RR-1	ND (8)	ND (10)	ND (20)	4.635 ± 4.84 (20, 20)
	6-1	Buhl	ND (8)	ND (10)	ND (10)	3.90 ± 2.45 (10, 10)
	6-29	RR	ND (8)	ND (9)	ND (20)	4.06 ± 3.96 (20, 20)
Tilapia	1-20-78	Buhl	—	ND (10)	ND (10)	9.96 ± 3.30 (10, 10)
	2-9	Buhl	ND (8)	—	ND (10)	12.495 ± 4.708 (10, 10)
	2-18	RR-1	—	—	ND (20)	14.811 ± 7.43 (20, 20)
	3-11	Buhl	ND (8)	ND (10)	ND (10)	15.79 ± 3.52 (10, 10)
	3-17	RR-1	ND (8)	ND (20)	ND (20)	11.905 ± 7.25 (20, 20)
	5-17	RR-1	ND (8)	ND (10)	ND (20)	10.58 ± 5.63 (20, 20)
	6-8	RR-1	ND (8)	ND (10)	ND (20)	10.265 ± 7.86 (20, 20)

TABLE VIII (continued)

Species	Date	Source	Mercury (μg/kg)	Cadmium (μg/kg)	Copper (μg/kg)	Zinc (mg/kg)
Tilapia (continued)	6-29	Buhl	ND (8)	ND (10)	ND (10)	8.06 ± 4.04 (10, 10)
	6-29	RR-1	ND (8)	ND (9)	ND (20)	12.29 ± 6.33 (20, 20)
Prawn	6-8-78	RRGE	ND	ND	ND	6.11 ± 6.67 (5, 5)
	7-24	RRGE	ND	ND	ND	11.52 ± 0.77 (25, 5)

a. All samples were nondetectable at detection limits of Hg-2.4 μg/kg; Cd-2.6 μg/kg; Cu-2.0 μg/kg.

b. The first number in parentheses is the total sample size.

c. The second number in parentheses is the subsample size for which the mean is calculated (nondetectable values are not included in the mean).

IV. DISCUSSION

1. FISH

1.1 Growth and Food Conversion

1.1.1 Catfish. Although examination of the data reveals that catfish grown indoors under high density outperformed those grown at a lower density; the difference did not prove to be statistically significant ($p = 0.05$). Using a Student-Newman-Keuls multiple-range test, the statistical analysis of catfish growth data indicates significant differences only between the control (Buhl) raceway, raceways 18 and 19 (outdoor), and raceways 4 and 11 (indoor, low density). There was also a significant difference between the weights of tilapia at Buhl and those at Raft River.

This growth difference may stem from a breakdown in social hierarchy[29,30] at high densities, which minimizes differential rates of feeding among individuals of the population. If that occurred, it is logical that a better distribution of food consumption would take place and would be manifested by higher growth rates in nearly all individuals in a particular raceway.

Catfish growth in the outdoor raceways was also greater than that shown by their indoor counterparts. There are several possible explanations for this observation:

(1) The food ration in the outdoor raceways was supplemented by food suspended in the incoming water.

(2) There was less indication of excitability in the fish held in outdoor raceways. This has been noted[31] as a behavioral pattern which could be reduced if cover was provided; a subsequent increase in food conversion was noted when the excitability factor was reduced.

(3) Raceway color (white for indoor raceways) was apparently a poor choice, and the darker color of the outdoor raceways (as a function of algae cover) may have contributed to growth in those containers.

(4) Possible effects of the natural photoperiod on growth in the outdoor raceways was discounted as References 32 and 33 reported that the impact of photoperiod was of little consequence.

Examination of the curves in Figures 2 and 3 suggests that essentially the same growth rates occurred in all raceways and densities, but that differences in timing of the onset of maximum growth rate do exist. Factors which contribute to this lag are not definitively known, but the following reasons are suggested:

(1) The move to Raft River inevitably resulted in stress to the fish.

(2) Fish stocked in the outdoor raceways resumed a growth rate similar to the Buhl controls with a minimum lag period, which appeared to be independent of density.

(3) Fish stocked in the indoor raceways were confronted with very different surroundings. The raceways were shallow in depth, and the fish were subjected to frequent disturbance; both have a negative impact on growth. After an extended lag period during which the fish apparently became acclimated to their surroundings, the slope of their growth curve approached that of the fish in the outdoor raceways and those at Buhl. Net differences in mean size at the termination of the experiment may simply reflect the presence and duration of the lag effect.

The food conversion ratio at Raft River was somewhat higher than expected, indicating that performance was reduced, and that the feeding rate was excessive. It is interesting to note that during the intermediate portion of the experiment (March 31 to May 25, 1978) food conversion ratios were much improved. This improvement implies that the feed ratios during this 3-month period of the fishes life cycle (wt = 95 to 250 g) may more closely satisfy physiological requirements. However, in our experimental work, this condition was complicated by the changes in feed and feeding methods described in the methods and materials (use of catfish pellet and hand feeding twice daily). Food conversion ratios appear to be independent of density over the range of 10 to 110 kg/m^3.

1.1.2 Tilapia. Growth and mortality data for tilapia in the outdoor raceways were invalidated by unexplained, unauthorized moving of fish between culture units by unknown parties. Food conversion efficiencies were derived from fish held in indoor raceways. The high-density stocking rate was apparently responsible for suppressing growth in tilapia. It is also apparent that food conversion rose dramatically over time, thus indicating very poor performance when density exceeded 7 kg/m^3.

1.1.3 Collagen. Collagen synthesis in both channel catfish and tilapia does not appear to be inhibited by any factor inherent to the geothermal water at Raft River. Collagen comprises 90% of the organic matrix of bone[12] and is the most abundant protein in the animal kingdom. The inhibition of collagen synthesis, either partial or complete, would preclude any attempt in commercial fish production at Raft River. Results of the present study are particularly positive with regards to the Phase I experiment in which collagen synthesis decreased midway through the experimental period and remained at a lowered level.

1.1.4 Heavy Metals and Fluorides. Accumulation of heavy metals and fluorides was not significant during the experimental period. Zinc was detected in all fish sampled. The levels of zinc decreased with time, and this phenomenon was particularly evident in fish at Buhl. A similar pattern was noted for fluorides. Fish moved from one water source to a different one containing lower levels of a contaminant will characteristically show a decrease in tissue levels of the contaminant as a new equilibrium is established. Not only were fish transported to the new water source at Raft River, but fish at Buhl were also moved to a new source during the experiment. This change corresponds to the decline in tissue zinc and fluoride levels observed. Moreover, as no zinc was detected in Raft River water samples, zinc tissue levels also declined.

The data indicate that heavy metals and fluoride levels are not sufficient to warrant concern about consumption of fish grown in Raft River geothermal water. In addition, these contaminants do not effect overall growth as measured by bone collagen deposition.

1.1.5 Prawn. Survival of prawns was apparently influenced by several factors, including excessively high densities, thermal stratification of the water in the small raceways, and the inadvertent introduction of tilapia into the ponds. Other investigators have reported survival rates ranging from 50 to 55% for pond culture[34,35,36] to 88% in culture tanks[37]. Although the ballast rings were introduced into the raceways to provide escape cover, this attempt did not prove particularly successful. Stocking densities higher than those reported in the literature[34,35,38] were purposely selected to determine if survival could be enhanced in the presence of escape cover. Several investigators have reported increased mortality in prawns resulted from cannibalism by siblings immediately following ecdysis[37]. These mortalities might be reduced by providing abundant escape cover since related experiments supported this approach; however, either some maximum density was exceeded, or other factors contributed to elevated mortality.

The pattern of prawn survival observed in the small raceways was attributed to thermal stratification of the water in those chambers. This was indicated by marked improvement of survival (to 81%) after restocking on April 21, when the standpipe was modified to allow water to be drawn from the bottom eliminating thermal stratification.

Growth rates for prawn held in raceways were somewhat lower than that reported by References 34 and 37. In contrast, caged prawns from Pond 2 showed a growth rate of approximately 0.77 mm/day, a value two to three times that of raceway prawns. There are several possible factors which contributed to the elevated growth rates of the outdoor caged prawns. One of these involves the natural photo-period to which these animals were exposed; secondly, the greater depth at which caged prawns were held might have influenced their well-being; thirdly, and most likely, was the abundant natural food supply present in the pond. Chironomids (*Chironomus*) quickly became abundant in the ponds, and it is apparent that the larval stages of these dipterans constituted an abundant and protein-rich food supply for the prawns, which were observed eating them on several occasions.

The successful culture of prawns requires much closer attention than was possible at the Raft River site. Based on similar experiments conducted on the ISU campus, Malaysian prawn must be regarded as a potentially valuable species for geothermal aquaculture.

V. CONCLUSIONS

In conclusion, aquaculture is biologically feasible in the geothermal water at Raft River. This conclusion seems particularly appropriate for catfish if the fish could be grown in raceways as large or larger than the outdoor raceways used for this work.

Moreover, the culture of tilapia and prawn would prove feasible had the problems discussed been avoided. Two pertinent features should be noted: (1) tilapia successfully reproduced in the ponds on several occasions, and (2) good survival and growth of prawns did occur under caged conditions in the pond. However, there appears to be a requirement for much more rigid control of factors such as feeding, algal growth and removal, and disturbance of the cultured animals. It is assumed that any large-scale or commercial endeavor would include full-time, on-site support personnel, thereby making possible control of the features noted above.

VI. REFERENCES

1. D. K. Campbell, L. Watson, J. C. Kent, D. W. Johnson, *1976 Aquaculture Report*, E(10-1)-1606 (1977).

2. National Academy of Sciences, *Aquaculture in the United States: Constraints and Opportunities*, National Research Council; Washington D.C. (1978).

3. R. A. Erkins, "Aquaculture," private conversation, International Seafood Consultants, Bliss, Idaho, March 1, 1979.

4. J. Ayers, "Aquaculture," private conversation, National Marine Fisheries Service, December 15, 1979.

5. C. C. Coutant, D. K. Cox, K. W. Moored, Jr., "Further Studies of Cold-Shock Effects on Susceptibility of Young Channel Catfish to Predation," *Proceedings of Symposium on Thermal Ecology, Augusta, Georgia, April 2-5, 1975*, Technical Information Center, ERDA CONF-750425 (1976).

6. L. Ray, "Commercial Fish Farms," private conversation, Fish Breeders of Idaho, Inc., May 1978.

7. J. W. Andrews, L. H. Knight, T. Murai, "Temperature Requirements for High Density Rearing of Channel Catfish from Fingerling to Market Size," *Progressive Fish Culturist 34* (1972) pp 240-241.

8. J. W. Andrews and Y. Matsuda, "The Influence of Various Culture Conditions on the Oxygen Consumption of Channel Catfish," *Transactions of American Fisheries Society 104*, (1975) pp 322-327.

9. J. L. Cheethan, C. T. Garten, C. L. King, M. H. Smith, "Temperature Tolerance and Preference of Immature Channel Catfish (*Ictalurus punctatus*)," *Copeia, 3* (1976) pp 609-612.

10. P. A. Sandifer and T. I. J. Smith, "Experimental Aquaculture of the Malaysian Prawn, *Macrobrachium rosenbergii* in South Carolina," *FAO Technical Conference on Aquaculture, Kyoto, Japan, May 26 — June 2, 1976.*

11. G. M. Carmignani and J. P. Bennet, "Leaching of Plastics Used in Closed Aquaculture Systems," *Aquaculture 7* (1976) pp 88-91.

12. P. M. Merle and F. L. Mayer, "Toxaphene Effects on Growth and Bone Composition of Fathead Minnow, *Pimephales promelas", Journal of Fisheries Research Board of Canada 32* (1975) pp 593-598.

13. B. Flanagan and G. Nichlos, "Metabolic Studies of Bone in Vitro," *Journal of Biological Chemistry, 237* (1962) pp 3266-3692.

14. P. B. Hawk, B. L. Oser, W. H. Summerson, *Practical Physiological Chemistry*, Toronto: The Blakiston Company, 1951.

15. L. Singer and W. D. Armstrong, "Determination of Fluoride in Bone with the Fluoride Electrode," *Journal of Analytical Chemistry, 40*, 3 (1968).

16. W. Johnson, "Malaysian Prawn Culturing," private conversation, Oregon Institute of Technology, May 1978.

17. *Standard Methods for the Examination of Water and Wastewater*, 14th edition, New York: American Public Health Association, Incorporated, 1971.

18. Environmental Protection Agency, *Manual of Methods for Chemical Analysis of Water and Wastes*, EPA-625-/6-74-003 (1974).

19. O. T. Lind, *Handbook of Common Methods in Limnology*, St. Louis: C. V. Mosby Company, 1974.

20. J. Uthe, F. Armstrong, M. Stainton, "Mercury Determination in Fish Samples by Wet Digestion and Flameless Atomic Absorption Spectrophotometry," *Journal of Fisheries Research, Board of Canada, 27*, 4 (1970).

21. *Varian-Technton Analytical Methods for Carbon Rod Atomizers*, Springvale, Victoria, Australia: Varian-Technton Pty. Limited, 1975.

22. *Analytical Methods for Flame Spectroscopy*, Springvale, Victoria Austrialia: Varian-Technton Pty. Limited, 1973.

23. D. A. Wright and A. W. Davison, "The Accumulation of Fluoride by Marine and Intertidal Animals," *Environmental Pollution, 8* (1975) pp 1-14.

24. M. S. Frant and J. W. Ross, "Electrode for Sensing Fluoride Ion Activity in Solution," *Science, 154* (1966).

25. W. G. Klontz, "Fish Survival and Mortality," personal conversation, University of Idaho, July 1978.

26. R. P. Wilson and W. E. Poe, "Impaired Collagen Formation in the Scorbutic Channel Catfish," *Journal of Nutrition, 103* (1973) pp 1359-1364.

27. R. V. Thurston et al, " Review of the Environmental Protection Agency Red Book: Quality Criteria for Water," Bethesda, Maryland: Water Quality Section, American Fisheries Society, 1978.

28. J. D. Hem, "Study and Interpretation of the Chemical Characteristics of Natural Water," *Geological Survey Water Supply Paper, 1473* (1959).

29. C. R. Maloy and H. Willoughby, "Rearing Marketable Channel Catfish in Ponds," *U.S. Department of Interior, Fish and Wildlife Service, Bureau of Sports Fisheries and Wildlife Resources, 31* (1976).

30. K. N. Randolph and H. P. Clemens, "Some Factors Influencing the Feeding Behavior of Channel Catfish in Culture Ponds," *Transactions of the American Fisheries Society, 105* (1976) pp 718-724.

31. H. R. Schmittou, "Developments in the Culture of Channel Catfish, *Ictalurus punctatus*, in Cages Suspended in Ponds," *Proceedings of the 23rd Annual Conference of the South East Association Game Fish Committee, Mobile, Alabama, October 20-22, 1969.*

32. R. R. Stickney and J. W. Andrews, "The Influence of Photoperiod on Growth and Food Conversion of Channel Catfish," *Progressive Fish Culturist, 33*, 4 (1971).

33. J. W. Page and J. W. Andrews, "Effects of Light Intensity and Photoperiod on Growth of Normally and Albino Pigmented Channel Catfish," *Progressive Fish Culturist, 37* (1975) pp 121-122.

34. M. Madranchar, "Stocking Densities," private conversation, Micronesian Mariculture Demonstration Center, Koror Palau, Western Caroline Island, 1978.

35. J. A. Goodwin and H. L. Hanson, "The Aquaculture of Freshwater Prawns *Macrobrachium* Species", *Proceedings of the Workshop on the Culture of Freshwater Prawns, Oceanic Institute, Waimanalo, Hawaii, November 1974*, U.S. Department of Commerce.

36. Department of Interior, *Development of a Prawn Culture Industry*, Annual Report: July 1, 1970 — June 30, 1971, U.S. Department of Interior, U.S. Fish and Wildlife Service, Bureau of Commercial Fisheries.

37. C. C. Dugan, R. W. Hagood, T. A. Frakes, "Development of Spawning and Mass Larval Rearing Techniques for Brackish — Freshwater Shrimps of the Genus *Macrobrachium* (Decapoda Palaemonidae)," Florida Marine Research Publication Number 12 (1975).

38. T. Fujimura and H. Okamoto, "Notes on the Progress Made in the Development of a Mass Culture Technique for *Macrobrachium rosenbergii* in Hawaii," London: Fishing News, 1970.

DISTRIBUTION RECORD FOR TREE-1370

Internal Distribution

1 - Chicago Patent Group - DOE
9800 South Cass
Argonne, IL 60439

1 - R. L. Blackledge
Idaho Operations Office - DOE
Idaho Falls, ID 83401

1 - H. P. Pearson
Information Processing - EG&G

6 - INEL Technical Library

200 - Author

External Distribution

465 - UC-66g - GE--Direct Applications of Heat from Geothermal Resources

Total Copies Printed: 674